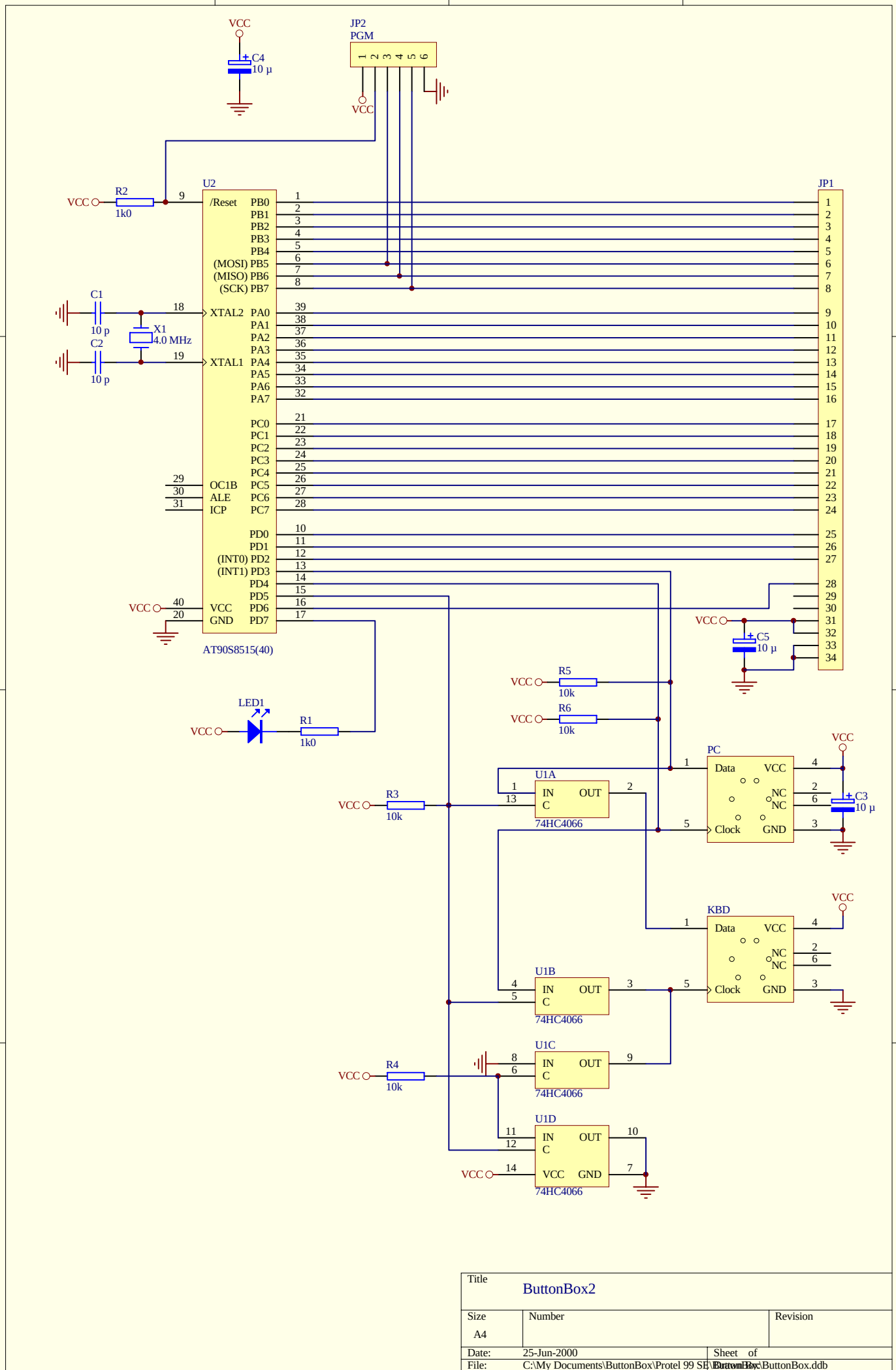

Title	ButtonBox2	
Size A4	Number	Revision
Date: 25-Jun-2000	Sheet of	
File: C:\My Documents\ButtonBox\Protel 99 SE\ButtonBox\ButtonBox.ddb	Drawn By:	